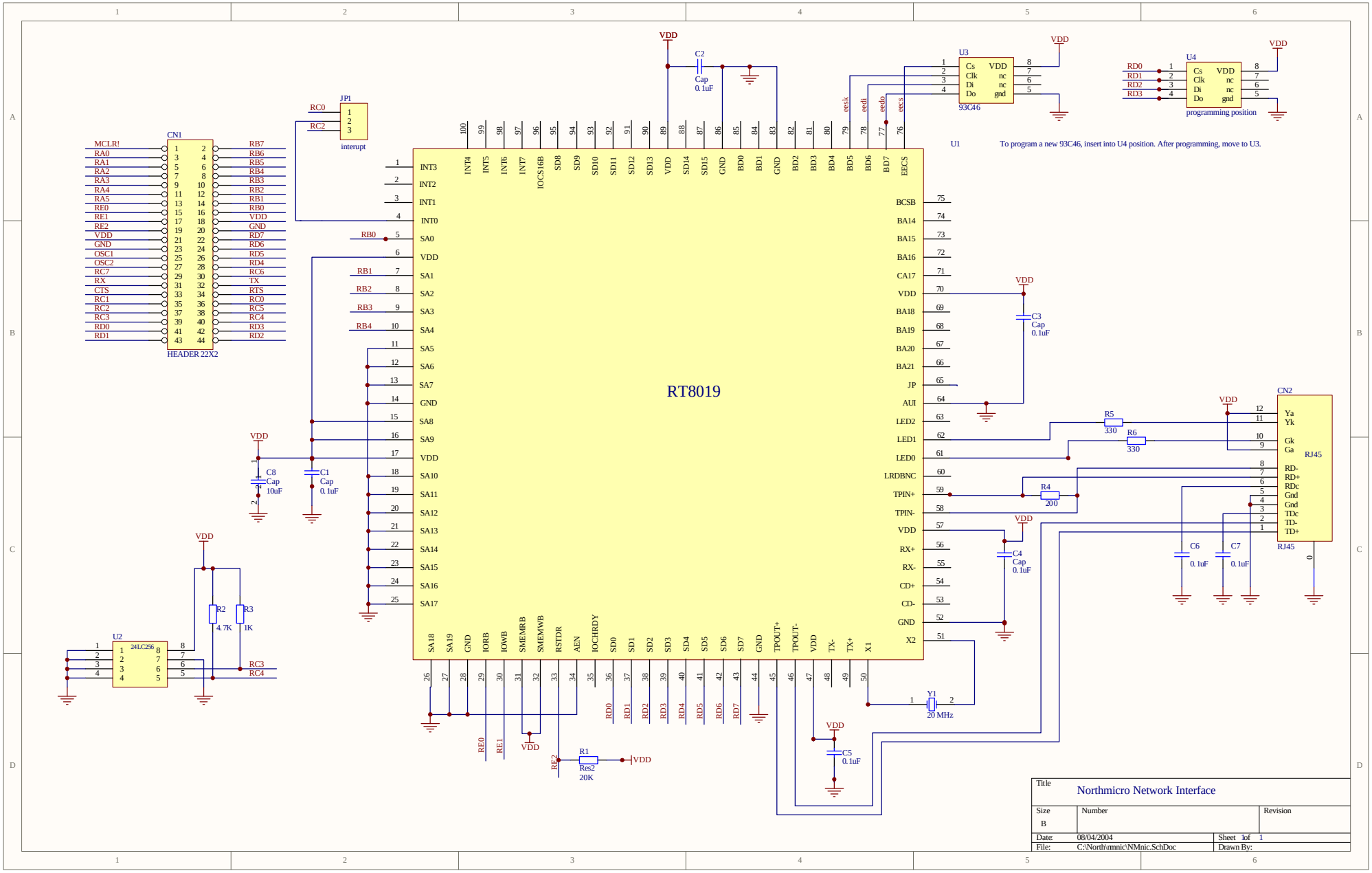
RT8019
CN1
HEADER 22X2
JP1
interupt
U1
To program a new 93C46, insert into U4 position. After programming, move to U3.
U3
93C46
U4
programming position
CN2
RJ45
U2
24LC256
Y1
20 MHz
C1 Cap 0.1uF
C2 Cap 0.1uF
C3 Cap 0.1uF
C4 Cap 0.1uF
C5 0.1uF
C6 0.1uF
C7 0.1uF
C8 Cap 10uF
R1 Res2 20K
R2 4.7K
R3 1K
R4 200
R5 330
R6 330
VDD
Title
Northmicro Network Interface
Size
B
Number
Revision
Date: 08/04/2004
Sheet 1of 1
File: C:\North\nmnic\NMnic.SchDoc
Drawn By: